Recc all piping to be sized per ASHRAE F36

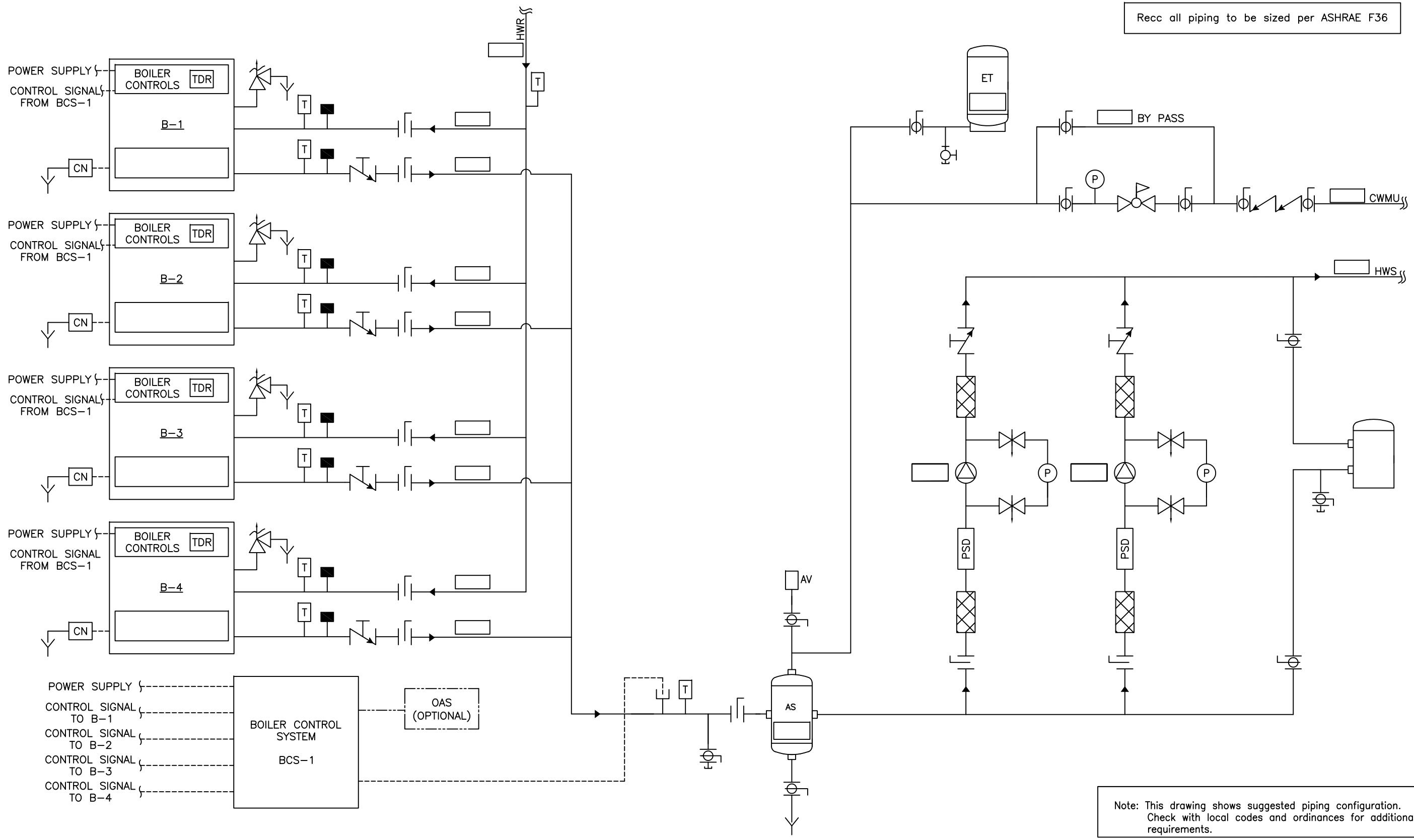

Note: This drawing shows suggested piping configuration. Check with local codes and ordinances for additional requirements.

REV	DESCRIPTION	BY	DATE
A	RELEASED	D.K	5/23/08

THIS DRAWING AND THE INFORMATION DEPICTED THEREIN IS THE PROPERTY OF FLOWTHERM SYSTEMS, A DIVISION OF CHC, CALIFORNIA HYDRONICS CORP., COPIES ARE ISSUED IN STRICT CONFIDENCE AND SHALL NOT BE REPRODUCED OR COPIED, OR USED AS THE BASIS FOR THE MANUFACTURING, INSTALLATION OR SALE OF PRODUCT WITHOUT PRIOR WRITTEN PERMISSION OF CHC.

PROJECT NAME:

PROJECT LOCATION:

ENGINEER:

CUSTOMER:

DRAWING TITLE: HYDRONIC VARIABLE VOLUME PRIMARY SYSTEM – 4 FULLY CONDENSING BOILERS, BUILT IN TEMP PROTECTION WITH 2 SYSTEM PUMPS

DRAWING No. H-VP-400-4BI-2 REV A

DRAWN BY	DATE	CHECKED	APPROVED	TOLERANCES UNLESS OTHERWISE SPECIFIED DEC.	ANGLE	SIZE	SCALE
D.K	05/23/08			.500"	5'	D	NTS

CHC
CALIFORNIA • RENO
800.486.4858
WASHINGTON • OREGON
ALASKA • IDAHO • MONTANA
888.690.0090