Recc all piping to be sized per ASHRAE F36.

Note: This drawing shows suggested piping configuration. Check with local codes and ordinances for additional requirements.

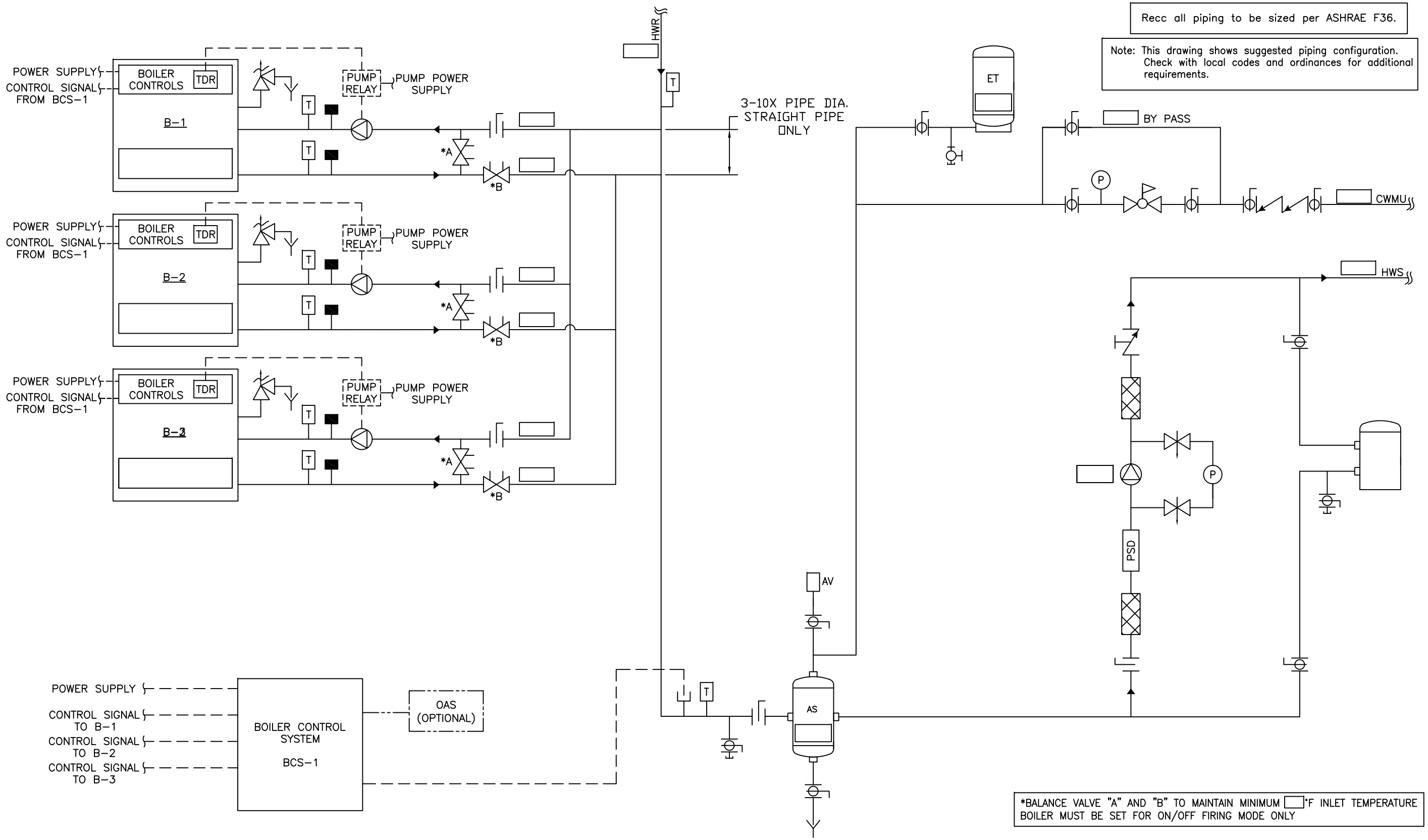

*BALANCE VALVE "A" AND "B" TO MAINTAIN MINIMUM ☐°F INLET TEMPERATURE
BOILER MUST BE SET FOR ON/OFF FIRING MODE ONLY

REV	DESCRIPTION	BY	DATE
A	RELEASED	RSG	05/28/08

THIS DRAWING AND THE INFORMATION DEPICTED THEREIN IS THE PROPERTY OF FLOWTHERM SYSTEMS, A DIVISION OF CHC, CALIFORNIA HYDRONICS CORP., COPIES ARE ISSUED IN STRICT CONFIDENCE AND SHALL NOT BE REPRODUCED OR COPIED, OR USED AS THE BASIS FOR THE MANUFACTURING, INSTALLATION OR SALE OF PRODUCT WITHOUT PRIOR WRITTEN PERMISSION OF CHC.

PROJECT NAME:

PROJECT LOCATION:

ENGINEER:

CUSTOMER:

DRAWING TITLE: HYDRONIC PRIMARY/SECONDARY – 3 SEALED COMBUSTION BOILERS, CIRCUIT SETTER PROTECTION, WITH EXTERNAL PRIMARY PUMP STARTER AND SYSTEM PUMP

DRAWING No. H-PS-202-3CS-1 REV A

TOLERANCES UNLESS OTHERWISE SPECIFIED

DRAWN BY	DATE	CHECKED	APPROVED	DEC.	ANGLE	SIZE	SCALE
D.K	05/23/08			.500"	5'	D	NTS

CHC
CALIFORNIA • RENO
800.486.4858
WASHINGTON • OREGON
ALASKA • IDAHO • MONTANA
888.690.0090