Recc all piping to be sized per ASHRAE F36

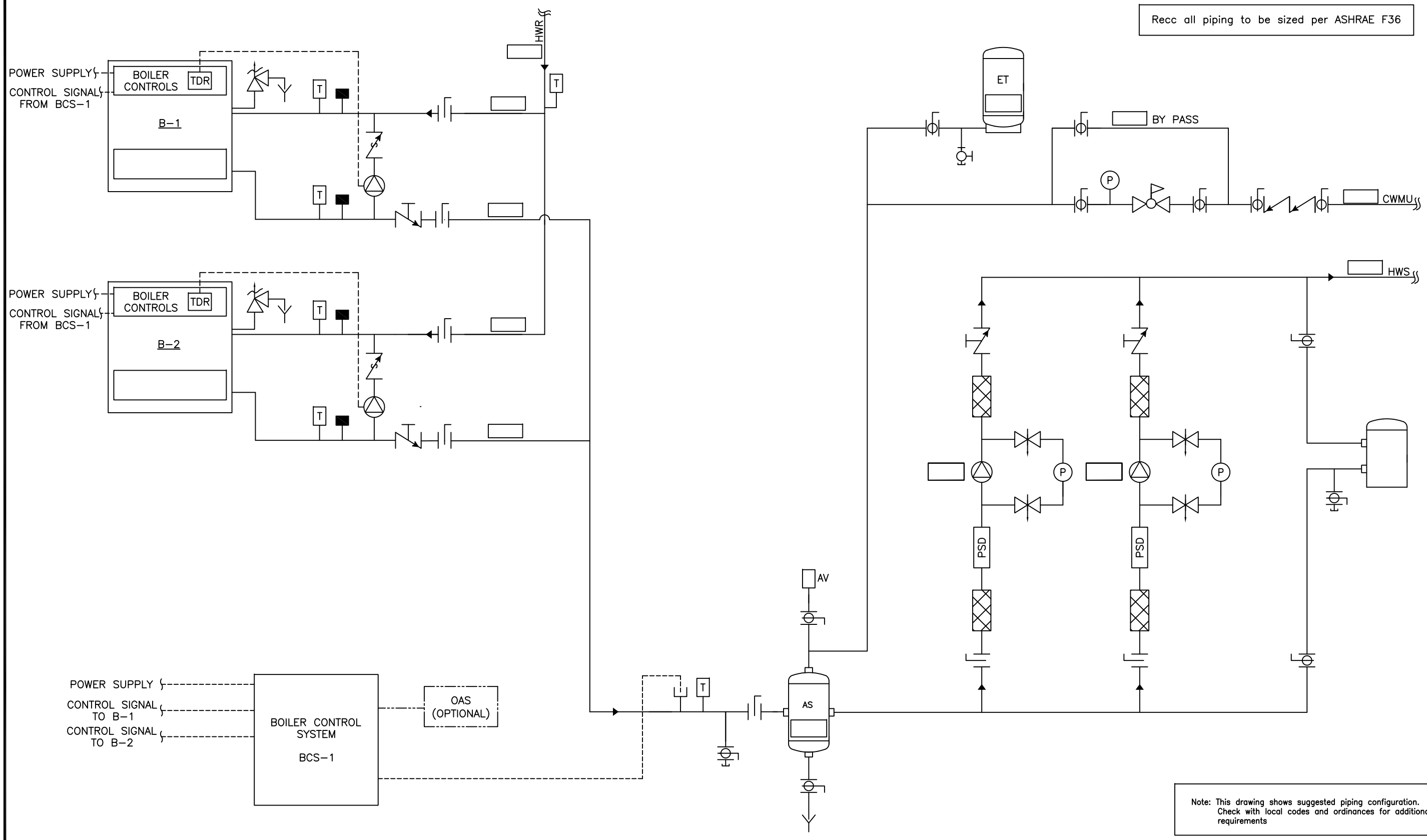


Note: This drawing shows suggested piping configuration. Check with local codes and ordinances for additional requirements

| REV | DESCRIPTION | BY | DATE |
|---|---|---|---|
| A | RELEASED | D.K | 5/23/08 |

THIS DRAWING AND THE INFORMATION DEPICTED THEREIN IS THE PROPERTY OF FLOWTHERM SYSTEMS, A DIVISION OF CHC, CALIFORNIA HYDRONICS CORP., COPIES ARE ISSUED IN STRICT CONFIDENCE AND SHALL NOT BE REPRODUCED OR COPIED, OR USED AS THE BASIS FOR THE MANUFACTURING, INSTALLATION OR SALE OF PRODUCT WITHOUT PRIOR WRITTEN PERMISSION OF CHC.

PROJECT NAME:

PROJECT LOCATION:

ENGINEER:

CUSTOMER:

DRAWING TITLE:
HYDRONIC CONSTANT VOLUME – 2 SEALED COMBUSTION BOILERS, BLEND PUMP WITH 2 SYSTEM PUMPS

DRAWING No. H-CV-200-2BP-2

REV A

TOLERANCES UNLESS OTHERWISE SPECIFIED

| DRAWN BY | DATE | CHECKED | APPROVED | DEC. | ANGLE | SIZE | SCALE |
|---|---|---|---|---|---|---|---|
| D.K | 05/23/08 | | | .500" | 5° | D | NTS |

CHC
CALIFORNIA • RENO
800.486.4858
WASHINGTON • OREGON
ALASKA • IDAHO • MONTANA
888.690.0090