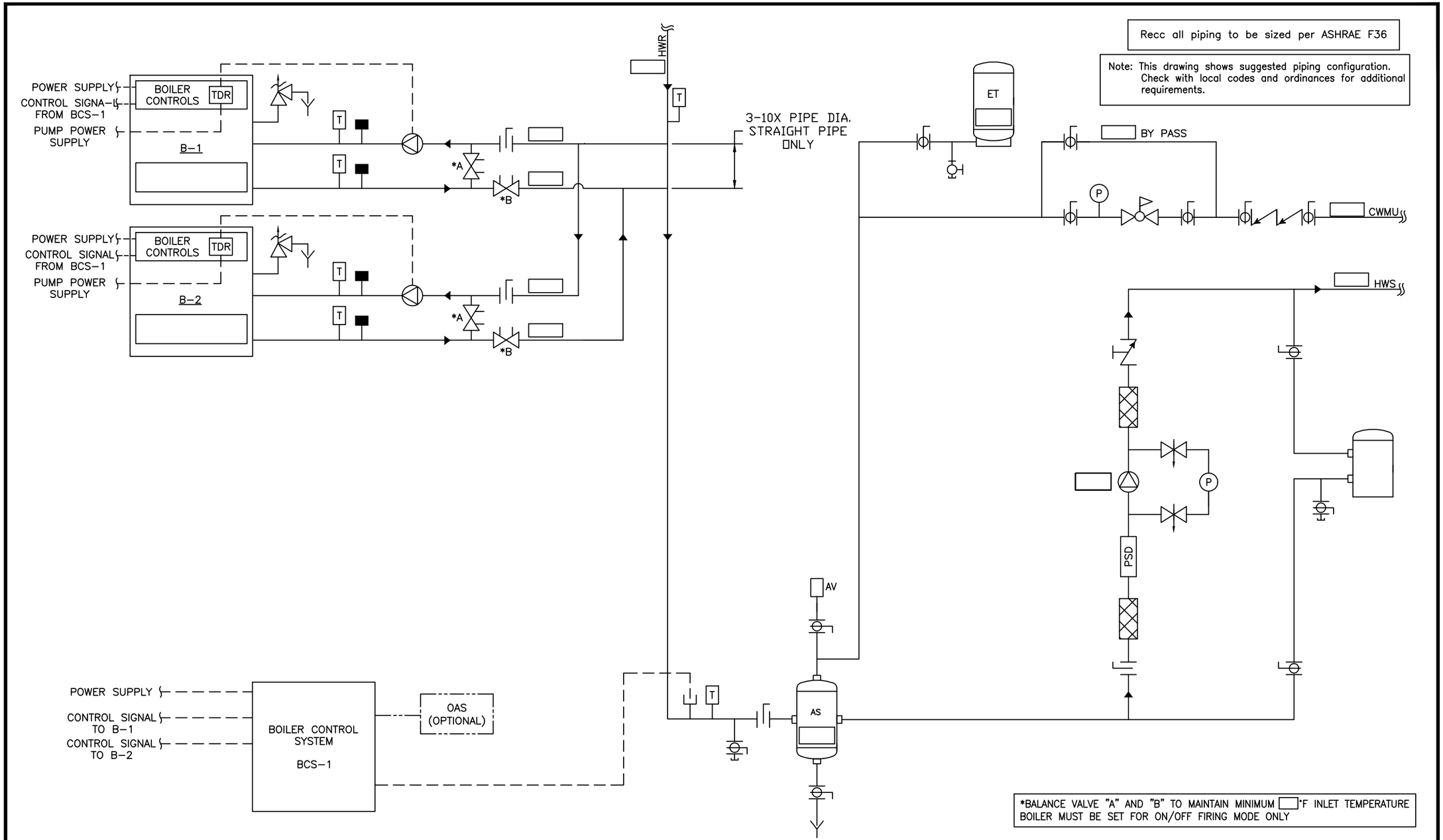

REV	DESCRIPTION	BY	DATE
A	RELEASED	RSG	05/28/08

THIS DRAWING AND THE INFORMATION DEPICTED THEREIN IS THE PROPERTY OF FLOWTHERM SYSTEMS, A DIVISION OF CHC, CALIFORNIA HYDRONICS CORP., COPIES ARE ISSUED IN STRICT CONFIDENCE AND SHALL NOT BE REPRODUCED OR COPIED, OR USED AS THE BASIS FOR THE MANUFACTURING, INSTALLATION OR SALE OF PRODUCT WITHOUT PRIOR WRITTEN PERMISSION OF CHC.

PROJECT NAME:

PROJECT LOCATION:

ENGINEER:

CUSTOMER:

DRAWING TITLE: HYDRONIC PRIMARY/SECONDARY – 2 ATMOSHPHERIC BOILERS WITH SEPARATE PRIMARY PUMP POWER, CIRCUIT SETTER PROTECTION, WITH SYSTEM PUMP

DRAWING No. H-PS-101-2CS-1 REV A

TOLERANCES UNLESS OTHERWISE SPECIFIED

DRAWN BY	DATE	CHECKED	APPROVED	DEC.	ANGLE	SIZE	SCALE
D.K	05/23/08			.500"	5°	D	NTS

CHC